bürkert
FLUID CONTROL SYSTEMS

2/2- and 3/2-way Ball Valve with pneumatic rotary actuator, plastic body, DN 10-50

- Radially expandable body
- Pneumatic actuator in compact model
- Optical position indicator
- Control valve connection acc. to NAMUR
- Safe blocked union nuts with Dual Block® Technology [1)]

Type 2658 can be combined with…

Type 6012/6014 P
Pilot valve

Type 8631
TopControl On/Off

Type 8640/8644
Valve block

Type 5470
Solenoid valve

Type 6519 NAMUR
Solenoid valve

The complete unit of the Type 2658 consists of a pneumatic rotary actuator and a ball valve body from plastic. The connection between the ball valve and the actuator is made via a standard interface (flange connection). The rotary movement in the actuator is produced by a linear piston with angled thread coupling. The rotary actuator moves the ball valve through 90° and thereby opens or closes the port cross-section. The compact pneumatically-operated ball valve can be used for a wide range of applications and media. The pneumatic rotary actuator can also be used for other purposes.

Special feature
The ball valves are equipped with the so-called Dual Block® Technology. This system serves as a safety device for the union nuts. It prevents these separating during operation.

Technical data	
Orifice	DN 10-50
Body material	PVC-U (PP, PVDF, PVC-C on request)
Actuator material	PA (Polyamide, glass-fibre reinforced)
Pilot air ports material	Stainless steel
Seal material O-rings Ball sealing	 EPDM, FKM PTFE
Media	Gaseous and liquid media which do not attack the body and the seal materials
Media temperature PVC body PP body PVDF body	(see chart p. 2) 0 to +60° C +10 to +80° C 0 to +120° C
Ambient temperature	-10 to +60° C
Port connections PVC-U PP, (PVDF on request)	 True union Fusion spigot
Control medium	Neutral gases, air
Pilot pressure single-acting actuator double-acting actuator	 5 - 10 bar (Ø 63 mm) 5 - 6 bar (Ø 100 mm) 2 - 10 bar (Ø 63 mm) 2 - 6 bar (Ø 100 mm)
Rotation	90° ±3°
Rotation time for 90°	1 to 3.5 s (depending on load and control pressure)
Connection between actuator and ball valve	Flange acc. to ISO 5211 and DIN 3337
Installation	As required, preferably with actuator upright

[1)] Dual Block® Technology is a registered trademark of FIP - Formatura Iniezione Polimeri S.p.A

DTS 1000021453 EN Version: F Status: RL (released | freigegeben | validé) printed: 02.09.2009

Technical data, continued

Kvs values 2/2-way ball valves

Orifice [mm]	Port connec-tion Ø [mm]	Kv value water [m³/h]	Pressure range [bar]		Actuator size Ø [mm]	
			PVC, PVDF	PP	double-acting	single-acting
10	16	4.8	0 - 16	0 - 10	63	63
15	20	12	0 - 16	0 - 10	63	63
20	25	23	0 - 16	0 - 10	63	63
25	32	46	0 - 16	0 - 10	63	100
32	40	66	0 - 16	0 - 10	63	100
40	50	105	0 - 16	0 - 10	63	100
50	63	204	0 - 10	0 - 10	63	100

Pressure temperature chart

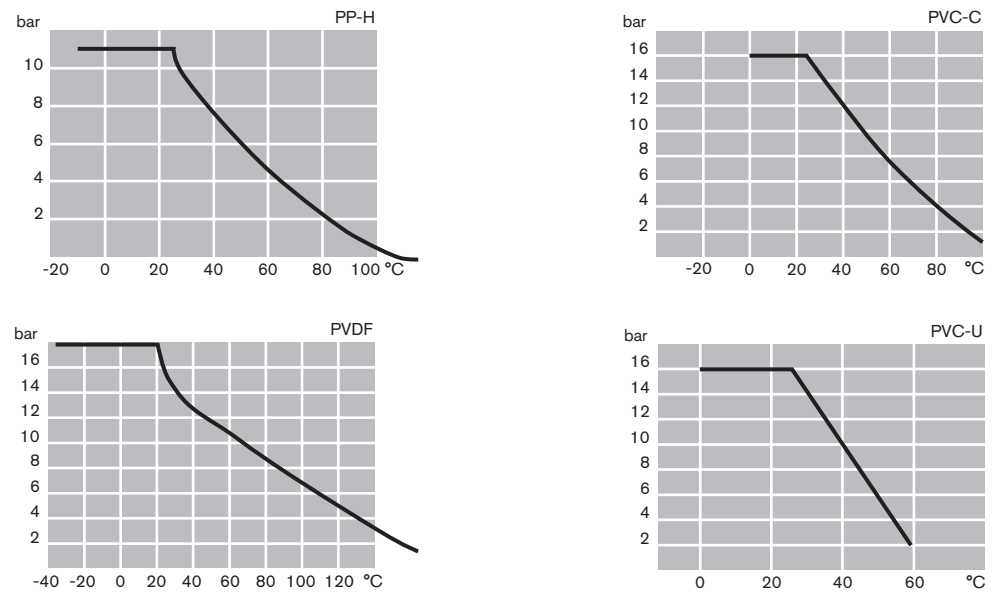

Material

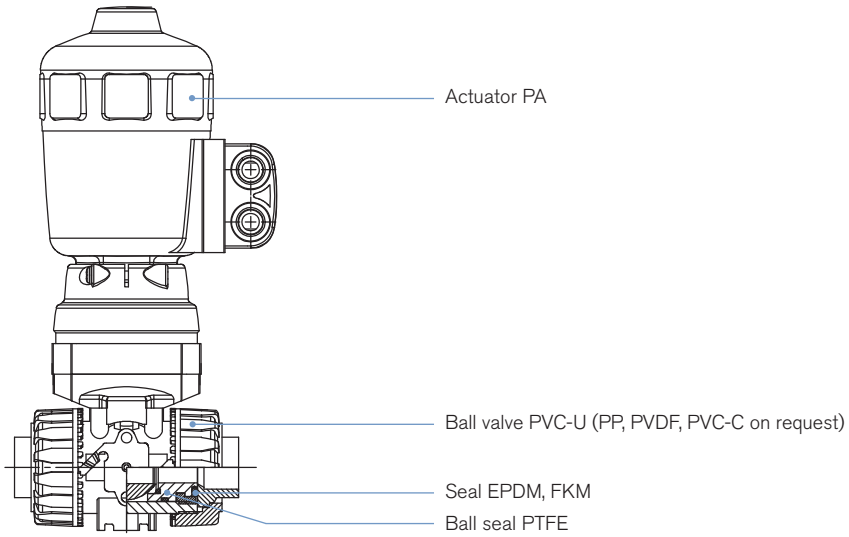

DTS 1000021453 EN Version: F Status: RL (released | freigegeben | validé) printed: 02.09.2009

bürkert

Ordering chart for 2/2-way ball valves (other versions on request)

PVC body 2/2-way, true union connection

Control function	Orifice [mm]	Port connection [mm]	Actuator size Ø [mm]	Kv-value water [m³/h]	Pressure range [bar]	Item no. Seal material EPDM	Item no. Seal material FKM
A 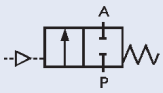 2/2-way normally closed (NC)	10	16	63	4.8	0 - 16	178 898	178 987
	15	20	63	12	0 - 16	178 944	178 986
	20	25	63	23	0 - 16	178 949	178 985
	25	32	63	46	0 - 16	178 955	178 983
	32	40	100	66	0 - 16	178 960	178 982
	40	50	100	105	0 - 16	178 964	178 980
	50	63	100	204	0 - 10	178 966	178 979
I 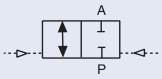 2/2-way, double-acting	10	16	63	4.8	0 - 16	176 491	176 505
	15	20	63	12	0 - 16	176 492	176 506
	20	25	63	23	0 - 16	176 493	176 507
	25	32	63	46	0 - 16	176 494	176 508
	32	40	63	66	0 - 16	176 495	176 509
	40	50	63	105	0 - 16	176 496	176 510
	50	63	100	204	0 - 10	176 497	176 511

PP body 2/2-way, fusion spigot connection

Control function	Orifice [mm]	Port connection [mm]	Actuator size Ø [mm]	Kv-value water [m³/h]	Pressure range [bar]	Item no. Seal material EPDM	Item no. Seal material FKM
A 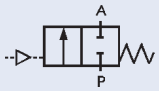 2/2-way normally closed (NC)	10	16	63	4.8	0 - 10	178 969	178 975
	15	20	63	12	0 - 10	178 972	178 974
	20	25	63	23	0 - 10	178 973	178 971
	25	32	63	46	0 - 10	178 976	178 962
	32	40	100	66	0 - 10	178 977	178 958
	40	50	100	105	0 - 10	178 981	178 952
	50	63	100	204	0 - 10	178 984	178 942
I 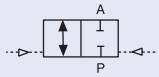 2/2-way normally closed (NC)	10	16	63	4.8	0 - 10	176 498	176 512
	15	20	63	12	0 - 10	176 499	176 513
	20	25	63	23	0 - 10	176 500	176 514
	25	32	63	46	0 - 10	176 501	176 515
	32	40	63	66	0 - 10	176 502	176 516
	40	50	63	105	0 - 10	176 503	176 517
	50	63	100	204	0 - 10	176 504	176 518

Flow rate: Kv value water [m³/h]: Measured at +20°C, 1 bar pressure at valve inlet and free outlet.
Pressure values [bar]: Overpressure to the atmospheric pressure

Further versions on request

Material
PP, PVDF, PVC-C

Additional
Mounting sets for DIN resp. ISO flange on request

Electrical position feedback Type 1062 (Please see Datasheet Accessories 2XXX.)

Spacer plates and treaded inserts for instrument panel attachment or wall assembly on request

DTS 1000021453 EN Version: F Status: RL (released | freigegeben | validé) printed: 02.09.2009

bürkert

Ordering chart for 3/2-way ball valves (other versions on request)

PVC body 3-way, true union connection, single-acting actuator, control function A

Schalt-stellung	Orifice [mm]	Port connection [mm]	Actuator size Ø [mm]	Kv-value water [m³/h]	Pressure range [bar]	Item no. Seal material EPDM	Item no. Seal material FKM
T1 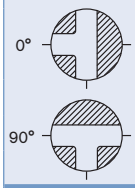	10	16	63	1.5	0-16	209 189	209 194
	15	20	63	2.1	0-16	209 190	209 195
	20	25	63	5.7	0-16	209 191	209 197
	25	32	100	8.4	0-16	209 192	209 198
	32	40	100	16.2	0-16	202 648	209 199
	40	50	100	19.8	0-16	209 193	209 200
L4 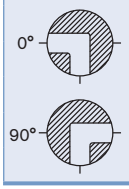	10	16	63	2.8	0-16	209 215	209 221
	15	20	63	4.3	0-16	209 216	209 222
	20	25	63	9.0	0-16	209 217	209 223
	25	32	100	15.9	0-16	209 218	209 224
	32	40	100	28.5	0-16	209 219	209 225
	40	50	100	37.2	0-16	209 220	209 226

PVC body 3-way, true union connection, double-acting actuator, control function I

Schalt-stellung	Orifice [mm]	Port connection [mm]	Actuator size Ø [mm]	Kv-value water [m³/h]	Pressure range [bar]	Item no. Seal material EPDM	Item no. Seal material FKM
T1 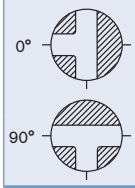	10	16	63	1.5	0-16	209 201	209 208
	15	20	63	2.1	0-16	209 202	209 209
	20	25	63	5.7	0-16	209 203	209 210
	25	32	63	8.4	0-16	209 204	209 211
	32	40	63	16.2	0-16	209 205	209 212
	40	50	100	19.8	0-16	209 206	209 213
L4 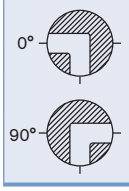	10	16	63	2.8	0-16	209 227	209 234
	15	20	63	4.3	0-16	209 228	209 235
	20	25	63	9.0	0-16	209 229	209 236
	25	32	63	15.9	0-16	209 230	209 237
	32	40	63	28.5	0-16	209 231	209 238
	40	50	100	37.2	0-16	209 232	209 239

Further versions on request

Material
PP, PVDF, PVC-C

Additional
Mounting sets for DIN resp. ISO flange on request

Electrical position feedback Type 1062 (Please see Datasheet Accessories 2XXX.)

Spacer plates and treaded inserts for instrument panel attachment or wall assembly on request

DTS 1000021453 EN Version: F Status: RL (released | freigegeben | validé) printed: 02.09.2009

Ordering chart for accessories

3/2-way pilote valves with banjo bolts

Seal material valve FKM, seal material banjo bolt NBR

Valve for actuator size [Ø mm]	Type	Pressure inlet P (valve body)	Service port A (banjo bolt)	Orifice [mm]	QNn value air [l/min]	Pres-sure range [bar]	Electrical coil connection Ind. Std.	Power consump-tion [W]	Item no. Voltage/ frequency [V/Hz]	
									024/DC	230/50
63	6012P	Tube fitting ø6 mm	G 1/4	1.2	48	0-10	Form B	4	552 283	552 286
63-100	6014P	G 1/4	G 1/4	2	120	0-10	Form A	8	424 103	424 107

Pilot valve with NAMUR flange see Type 0450 NAMUR, 54070 NAMUR, 6517 NAMUR and 6519 NAMUR.

NAMUR adapter for pilot valves with NAMUR flange

Actuator size [Ø mm]	Material	Item no.
63	Plastic (PA)	427 405
100	Brass	637 114
	Stainless steel	634 275

Cable plug for Type 2507, Form B or Type 2508, Form A

Plug configuration acc. to DIN EN 175301-803	Item no.
Form B, 0 to 250 V without circuitry (Type 6012 P)	423 845
Form A, 0 to 250 V without circuitry (Type 6014 P, Type 0331P)	008 376

DTS 1000021453 EN Version: F Status: RL (released | freigegeben | validé) printed: 02.09.2009

Dimensions [mm]

2/2-way

Actuator size 100

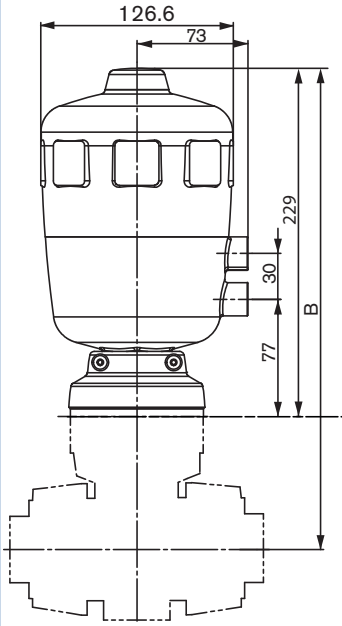

Actuator size 63

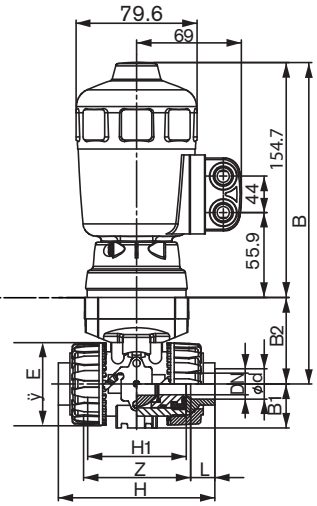

DN	ød	Actuator size Ø [mm]	H	H1	Z	L	øE	B1	B2	B
10	16	63	103	65	75	14	54	29	58	213
15	20				71	16				
20	25		115	70	77	19	65	34.5	69	224
25	32		128	78	84	22	73	39	74	229
32	40		146	88	94	26	86	46	91	246
40	50		164	93	102	31	98	52	97	252
50	63		199	111	123	38	122	62	114	269
32	40	100	146	88	94	26	86	46	91	320
40	50		164	93	102	31	98	52	97	326
50	63		199	111	123	38	122	62	114	343

3/2-way

Actuator size 100

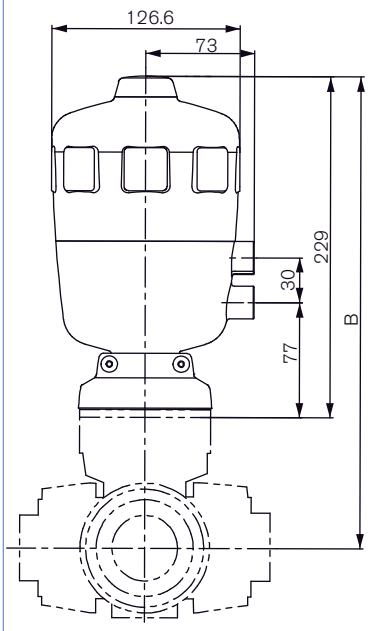

Actuator size 63

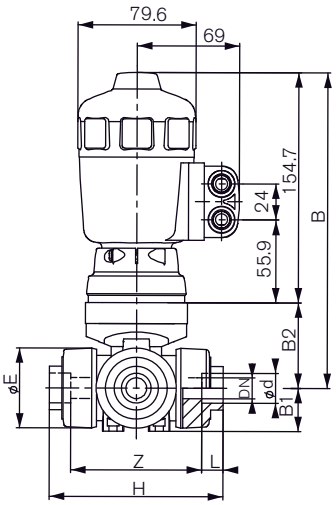

Actuator size 63, 100

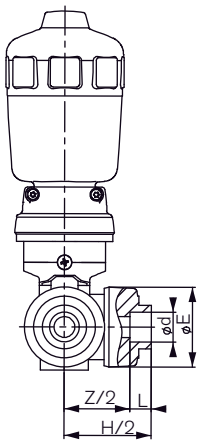

DN	ød	Actuator size Ø [mm]	H	Z	L	ØE	B1	B2	B
10	10	63	118	90	14	54	29	58	213
15	20			86	16				
20	25		145	107	19	65	34.5	69	224
25	32		160	116	22	73	39	74	229
32	40		188.5	136.5	26	86	46	91	246
40	50		219	157	31	98	52	97	252
50	63		266.5	190.5	38	122	62	114	269
32	40	100	188.5	136.5	26	86	46	91	320
40	50		219	157	31	98	52	97	326
50	63		266.5	190.5	38	122	62	114	343

DTS 1000021453 EN Version: F Status: RL (released | freigegeben | validé) printed: 02.09.2009

Pneumatic Actuator Type 2050 (without regulating unit)

Ordering chart for Pneumatic Actuator, Type 2050

Control function	Actuator size Ø [mm]	Pressure range [bar]	Flange	Item no.
A 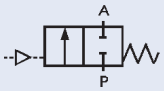 Single-acting	63	3.5 - 10	F04	142 621
			F05	142 622
	100	3.5 - 6	F05	140 809
			F07	140 810
I 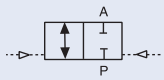 Double-acting	63	2 - 10	F04	140 805
			F05	140 806
	100	2 - 6	F05	140 807
			F07	140 808

Torque at the actuator shaft [Nm]

Control function A
Actuator size Ø 63 mm

Opening with 4.5 or 6 bar pilot pressure against the spring force

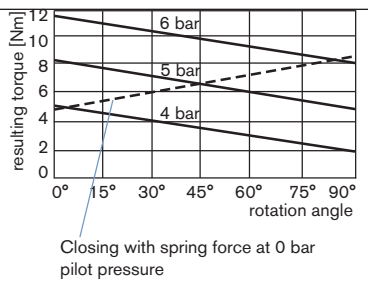

Control function A
Actuator size Ø 100 mm

Opening with 4.5 or 6 bar pilot pressure against the spring force

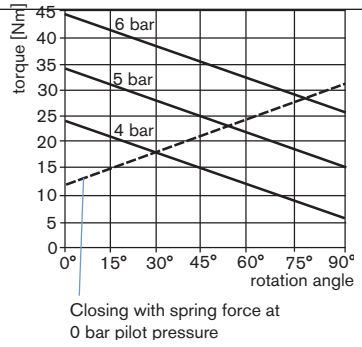

Control function I
Actuator size Ø 63 and 100 mm

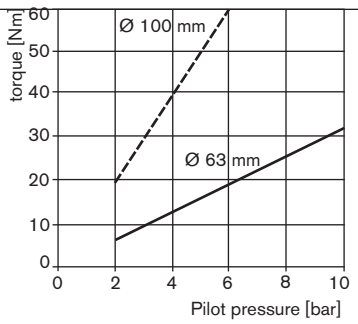

DTS 1000021453 EN Version: F Status: RL (released | freigegeben | validé) printed: 02.09.2009

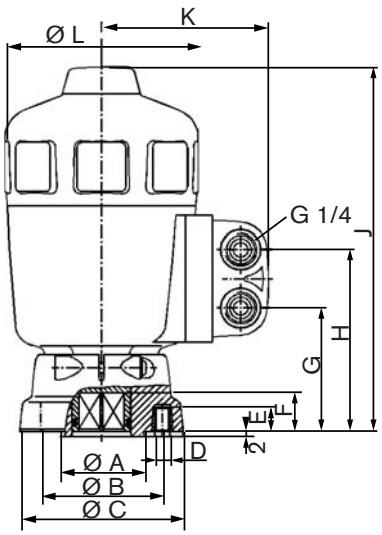

Bottom view of actuator interface with universal flange

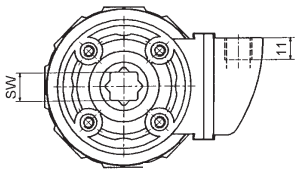

Square position acc. ISO 5211

Acc. DIN 3337

Actutor-Ø	flange	Ø A	Ø B	Ø C	D	E	F	G	H	J	K	Ø L	SW
63	F 04	30	42	67	M5	9	16	51	75	150	69	80	11
	F 05	35	50	67	M6	10	16	51	75	150	69	80	14
100	F 05	35	50	90	M6	10	21	72	102	224	73	127	14
	F 07	55	70	90	M8	12	21	72	102	224	73	127	17

DTS 1000021453 EN Version: F Status: RL (released | freigegeben | validé) printed: 02.09.2009

To find your nearest Burkert facility, click on the orange box → **www.burkert.com**

In case of special application conditions, please consult for advice

Subject to alteration.
© Christian Bürkert GmbH & Co. KG

0907/5_EU-en_008919271