bürkert
FLUID CONTROL SYSTEMS

Universal controller eCONTROL for flow, pressure and temperature

- Microprocessor control
- Control of proportional and process valves
- For gases and liquids
- Sensor inputs (4-20 mA, frequency, Pt100)
- External or internal setpoint programming
- Valve and sensor data are memorized

Type 8611 can be combined with..

Type 6223
Proportional Valve

Type 2012
Globe control valve

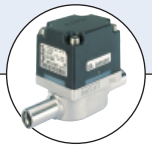

Type 8012
INLINE flow sensor

Type 8314
Pressure transmitter 4-20 mA

Type 8417
Pt100 sensor

Thanks to its compact design, the universal 8611 controller is especially designed for compact control system applications.
It is compatible with a wide range of proportional control valves and connects with an electro-pneumatic servo-system for pneumatically actuated process control valves.
The proportional & Integral (PI) process controller is equipped with many additional functions.
The actual process value can be supplied as one of three inputs; a standard current (4-20 mA), frequency or Pt100 signal directly to the universal controller.
The process switching points can be set via a 4-20 mA signal or with the keypad
For temperature specific control, it is possible to develop a cascade structure with both temperature and flow as inputs.
Thanks to the proportional control capabilities, a wide range of control functions can be performed in a variety of liquids and gas medias.

General data	
Materials	
Housing, cover	PC, +20% glass fibre
Front panel folio / Screws	Polyester / Stainless steel
Multipin	CuZn, nickel-plated
Wall-mounted holder	PVC
Display	8-digit LCD with backlight
Electrical connections	Multipin: 3-pin or/and 4-pin M8, 8- pin M12
Voltage supply cable	0,5 mm^2 max. cross section, max. 100 m, shielded
Environment	
Ambient temperature	0 up to + 70 °C (operating and storage)
Relative humidity	≤ 80%, without condensation
Standards and approvals	
Protection class	IP65
Standard	
EMC	EN 50081-1, 50082-2

DTS 1000089169 EN Version: G Status: RL (released | freigegeben | validé) printed: 26.08.2009

Electrical data	
Power supply	24 V DC ±10%, filtered and regulated
Power consumption	approx. 2 W (without valve - without sensor input)
Input	
Setpoint	
Standard 4-20 mA	Max. input impedance: 70 Ω Resolution: 5,5 µA
Standard 0-10 V (on request)	Max. input impedance: 11,5 kΩ Resolution: 2,7 mV
Sensors	
Standard 4-20 mA	Max. input impedance: 70 Ω Resolution: 5,5 µA
Frequency	
Input 1	External sensor min. 0,25 Hz / max. 5 kHz input impedance:> 1 kΩ Signal type: Sinus, square, triangle pulse (> 3000 mVpp, max. 30 Vpp)
Input 2	Internal Hall sensor min. 0,25 Hz / max. 5 kHz (only with Bürkert Type S030 flow fitting)
Pt100 (2 wires)	Measuring range: 0 °C ... 200 °C Measuring current: 1 mA Measuring error: < 0,5 °C
Sensor power supply	24 V DC, max. 1 A
Binary input	Input impedance: 10 kΩ Operating threshold: 2 V ... 30 V Max. frequency: 5 kHz
Sorties	
Continuous signal	Standard signal 4-20 mA max. loop resistance: 680 Ω accuracy: 1%
Discontinuous signal	2 transistor outputs (PNP) for PWM-signal Control frequency 1,2 kHz ... 20 Hz resolution max.: 16 Bit (depend from frequency) max. current load: 1 A switching voltage: 24 V DC
Binary output	Transistor output (PNP) (configurable) max. current load: 1 A switching voltage: 24 V DC
Total load of all outputs	max. 2 A

Assembly versions

Mounting on sensor-fitting -
eCONTROL Fitting-mounted

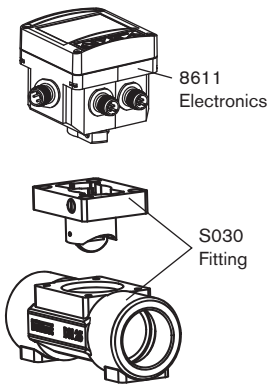

Mounting on a wall -
eCONTROL Wall-mounted

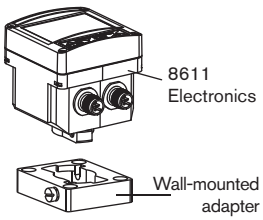

Mounting on a rail -
eCONTROL Rail-mounted

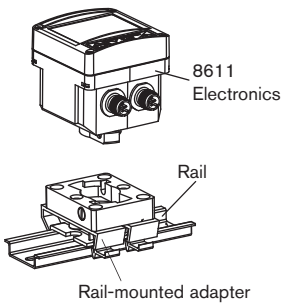

Mounting on a solenoid valve -
eCONTROL Solenoid-valve-mounted

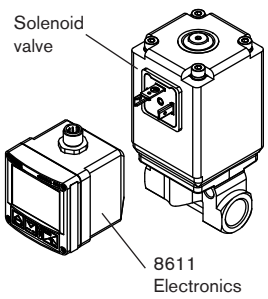

Dimensions [mm]

8611 - eCONTROL Fitting-mounted

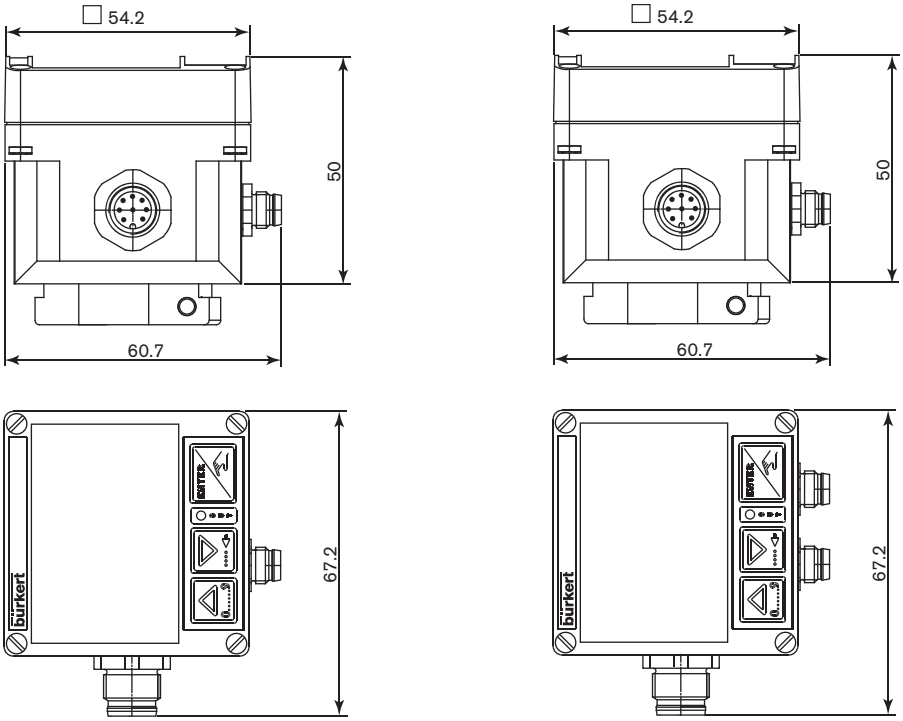

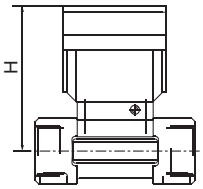

DN [mm]	H [mm]
06	79,5
08	79,5
15	84,5
20	82,0
25	82,2
32	85,8
40	89,6
50	95,7
65	98,7

DTS 1000089169 EN Version: G Status: RL (released | freigegeben | validé) printed: 26.08.2009

Dimensions [mm] (continued)

8611 eCONTROL Wall-mounted

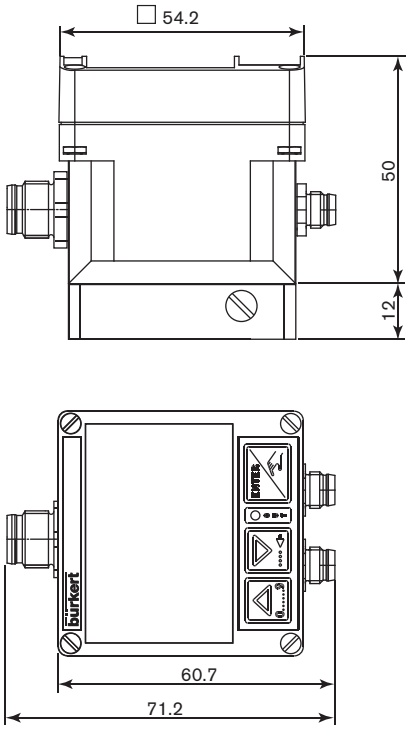

8611 eCONTROL Rail-mounted

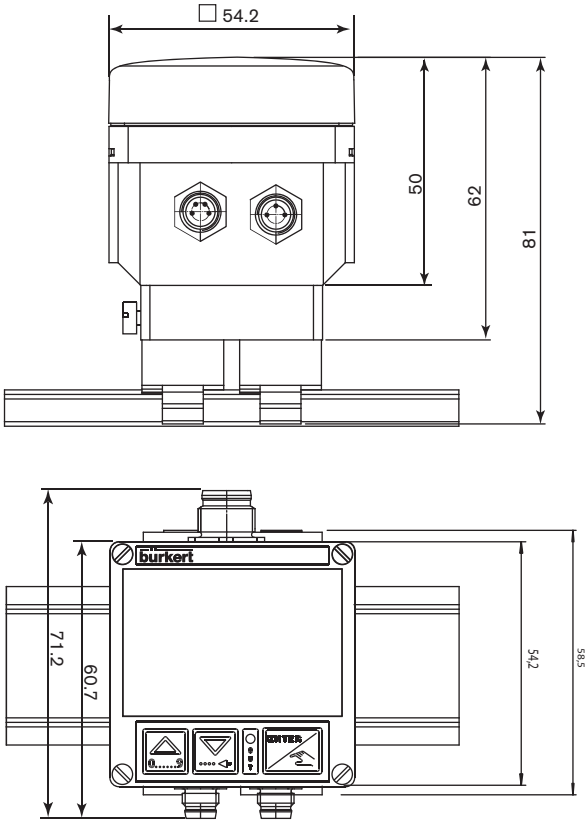

8611 eCONTROL Solenoid-valve-mounted

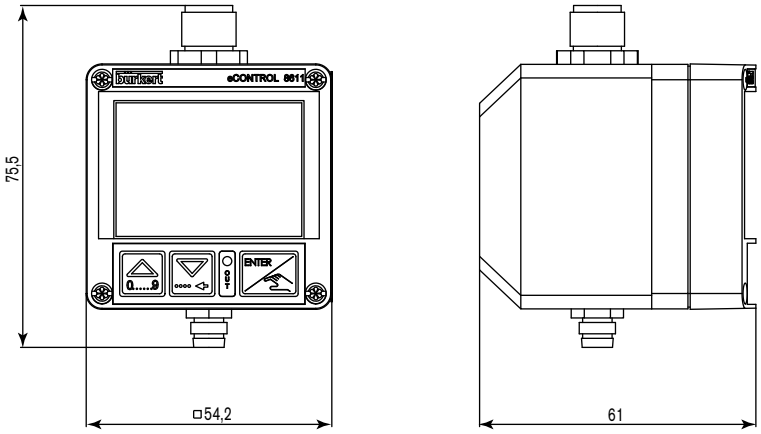

Connection feasibility and controller versions

Assembly	Flow sensor fitting		Wall- and rail-mounted	Solenoid-valve-mounted
Sensor	integrated HALL-sensor, without external sensor input	integrated HALL-sensor with external sensor input	without HALL-sensor, with external sensor input	without HALL-sensor, with external sensor input
Control	▪ Flow regulation	▪ Temperature regulation with flow display ▪ Temperature regulation with subsidiary flow control	▪ Temperature regulation ▪ Pressure regulation ▪ Flow regulation	▪ Temperature regulation ▪ Pressure regulation ▪ Flow regulation
	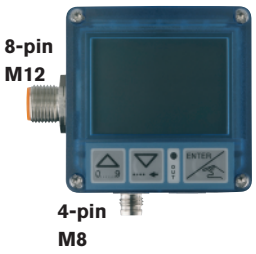	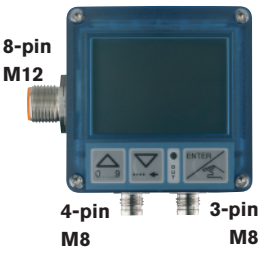		

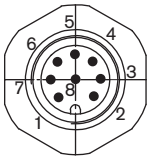

8-pin M12 plug

Supply, setpoint value, actual process value, binary input, binary output

4-pin M8 plug

Control output of proportional valves, process valves, or 4-20 mA actuator

3-pin M8 plug

Sensor input (4-20 mA, frequency, Pt100)

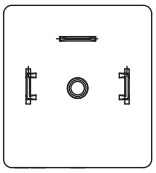

DIN 175301-803

Solenoid valve connection

bürkert

Ordering chart for universal Controller Type 8611

A controller Type 8611 consists of:

for Fitting-mounted
- an electronic module 8611
- an INLINE fitting S030
(DN 06 - DN 65)
(Refer to corresponding data sheet - has to be ordered separately)

for Wall-mounted
- an electronic module 8611
- a wall-mounted adapter
(supplied)

for Rail-mounted
- an electronic module 8611
- a rail-mounted adapter
(supplied)

for Solenoid-valve-mounted
- an electronic module 8611
- a solenoid valve
(Refer to corresponding data sheet - has to be ordered separately)

Mounting disposition	Sensor input externe	Sensor input interne	controller outputs (*)		Power supply	Setpoint setting	Process value output	Item no.
Fitting	-	Flow rate (Fitting S030)	2 x PWM	4-20 mA	24 V DC	4...20 mA	4 ...20 mA (*)	177 455
	Temperature (Pt100)	Flow rate (Fitting S030)	2 x PWM	4-20 mA	24 V DC	4...20 mA	4 ...20 mA (*)	177 458
	Temperature, (4-20 mA)	Flow rate (Fitting S030)	2 x PWM	4-20 mA	24 V DC	4...20 mA	4 ...20 mA (*)	177 463
Wand	Flow rate (frequency- NPN)	-	2 x PWM	4-20 mA	24 V DC	4...20 mA	4 ...20 mA (*)	177 454
	Temperature (Pt100)	-	2 x PWM	4-20 mA	24 V DC	4...20 mA	4 ...20 mA (*)	177 457
	Flow rate, pressure or temperature (4-20 mA)	-	2 x PWM	4-20 mA	24 V DC	4...20 mA	4 ...20 mA (*)	177 462
	Flow rate, pressure or temperature (4-20 mA)	-	4-20 mA	-	24 V DC	4...20 mA	-	182 383
Rail	Flow rate (frequency- NPN)	-	2 x PWM	4-20 mA	24 V DC	4...20 mA	4 ...20 mA (*)	177 091
	Temperature (Pt100)	-	2 x PWM	4-20 mA	24 V DC	4...20 mA	4 ...20 mA (*)	177 456
	Flow rate, pressure or temperature (4-20 mA)		2 x PWM	4-20 mA	24 V DC	4...20 mA	4 ...20 mA (*)	177 460

*** Either PWM (Puls-width-modulated) or 4-20 mA selectable as controller output. If 4-20 mA selected as controller output, the control process value (4-20 mA) isn't available.**

Mounting disposition	Sensor input externe	Sensor input interne	controller outputs	Setpoint setting	Process value output	Item no.
Solenoid valve	Temperature (Pt100)	-	1 x PWM	4-20 mA	4-20 mA	204 642
	Temperature (Pt100)	-	1 x PWM	0 - 10 V	4-20 mA	204 643
	Flow rate (frequency- NPN)	-	1 x PWM	4-20 mA	4-20 mA	204 639
	Flow rate (frequency- NPN)	-	1 x PWM	0 - 10 V	4-20 mA	204 640
	Flow rate, pressure or temperature (4-20 mA)	-	1 x PWM	4-20 mA	4-20 mA	186 289
	Flow rate, pressure or temperature (4-20 mA)	-	1 x PWM	0 - 10 V	4-20 mA	204 641

DTS 1000089169 EN Version: G Status: RL (released | freigegeben | validé) printed: 26.08.2009

Ordering chart for accessories (has to be ordered separately)

	Description	Item no.
Wall-mounted adapter		427 098
Rail-mounted adapter		655 980
	Positioning system 8810 for pneumatic actuators with rail-mount adapter	204 458
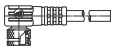	4-pin M8 female right angle connector with self-locking threaded joint and 2 m molded cable (valve output)	918 718
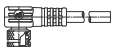	3-pin M8 female right angle connector with self-locking threaded joint and 2 m molded cable (sensor input)	918 717
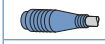	4-pin M8 female connector, straight with snap-on connection and 2 m molded cable (valve output)	919 060
	3-pin M8 female connector, straight with snap-on connection and 2 m molded cable (sensor input)	918 039
	8-pin M12 female connector, straight with screw connection and 2 m molded cable (PUR) (Power supply)	919 061
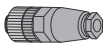	8-pin M12 female connector, straight with screw connection, to assemble (Power supply)	918 998

DTS 1000089169 EN Version: G Status: RL (released | freigegeben | validé) printed: 26.08.2009

Examples of applications

Cascaded temperature control with process control valve

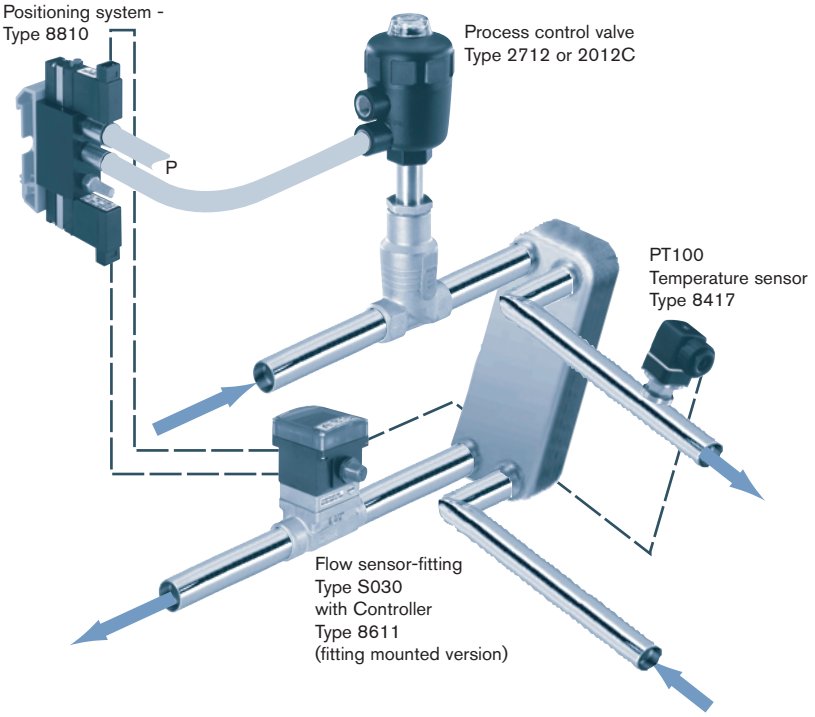

Flow control with process control valve

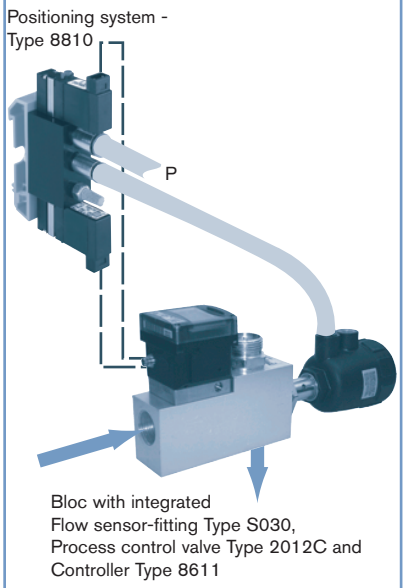

Temperature control with solenoid control valve

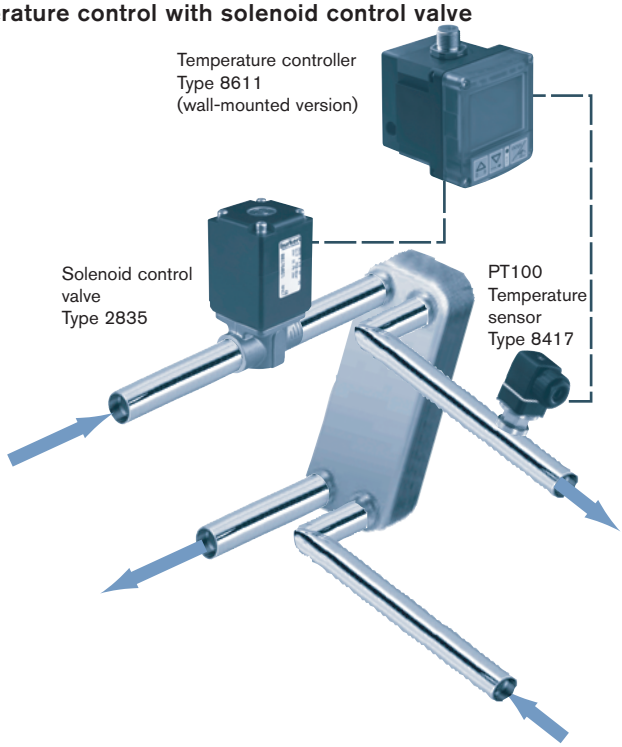

Multi channel solution

with process control valve

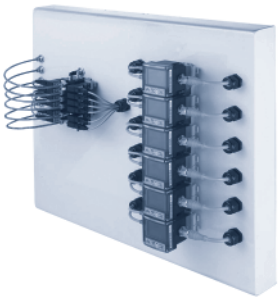

with solenoid control valve

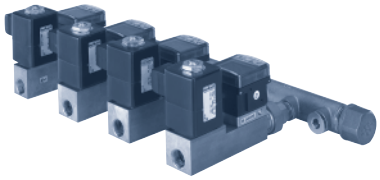

*To find your nearest Bürkert facility, click on the orange box → www.burkert.com

In case of special application conditions,
please consult for advice.

Subject to alteration.

0908/6_EU-en_00895018

DTS 1000089169 EN Version: G Status: RL (released | freigegeben | validé) printed: 26.08.2009