bürkert
FLUID CONTROL SYSTEMS

Mass Flow Meter (MFM) for Gases

- Bypass MFM with capillary technology for nominal flow rates from 5 ml_N/min to 10 l_N/min
- Applicable for aggressive gases
- Fieldbus option

Type 8700 can be combined with...

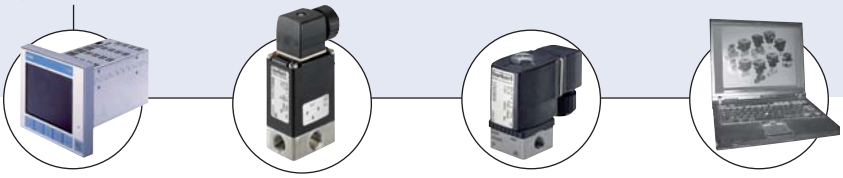

Type 1150
Multi-channel program controller

Type 0330
3/2 or 2/2-way valve

Type 6013
2/2-way valve

MassFlowCommunicator
Communications software

Mass flow meters are used in process technology for the direct measurement of the mass flow of gases. In case of volumetric flow meters, it is necessary to measure the temperature and the pressure either the density, because gases change their density or rather their volume depending on the pressure. The measurement of the mass flow, on the other hand, is independent of the pressure and the temperature.

The digital mass flow meter Type 8700 uses a classic bypass sensor (see the description on page 2). The actual flow is given as an analog output signal or could be read out over RS-communication, also fieldbus devices are available. Type 8700 can optionally be calibrated for two different gases, the user is able to switch between these two gases.

The materials of the parts that come into contact with the medium are selected according to customer specification so that the unit can be operated with the complete range of standard process gases.

Typical application areas are gas flow measurement in:

- Test benches
- Environmental technology
- Gas consumption metering
- Analytical equipment

Technical data

Full scale range [1] (Q_{nom})	5 to 10,000 ml_N/min N_2 equivalent
Operating media	Neutral or aggressive gases, others on request
Max. operating pressure (inlet pressure)	10 bar (145 psi)
Calibration medium	Operating gas or N_2 with conversion factor
Medium temperature	-10 to +70°C
Ambient temperature	-10 to +50°C
Accuracy (after 30 min. warm up time)	±1.5% o.R. ±0.3% F.S.
Linearity	± 0.1% F.S.
Repeatability	± 0.1% F.S.
Control range	1:50
Response time ($t_{95\%}$)	<3 s
Body material	Stainless steel
Electronic Housing	PC (Polycarbonate)
Sealing material	FKM, EPDM, FFKM
Port connections	NPT 1/4, G 1/4, sub-base or screw-in fitting, others on request
Electrical connection	Plug Sub D 15-pin Plug M12 (DeviceNet, CANopen) 5-pin Socket M12 (PROFIBUS-DP) 5-pin

[1] at standard conditions 1.013 bar (a) and 0°C

Power supply	24V DC
Voltage tolerance	±10 %
Residual ripple	<2 %
Power consumption	max. 2.5 W, max. 5 W (Fieldbus version)
Output signal Max. current (volt. output) Max. load (current output)	0-5 V, 0-10 V, 0-20 mA or 4-20 mA 10 mA 600 Ω
Fieldbus communication	PROFIBUS-DP, DeviceNet, CANopen, RS232/485 (RS Interface with adapter)
Protection class	IP40
Dimensions [mm]	See drawings
Total Weight	ca. 750 g (stainless steel)
Mounting position	Horizontal or vertical
Light emitting diode display (default, other functions possible)	Indication for Power, Limit (with analog signals)/ Communication (with fieldbus) and Error
Binary input (default, other functions possible)	Two 1. not assigned 2. not assigned
Binary output (default, other functions possible)	One relay-output for 1. Q_{nom} almost reached max. load: 25V, 1A, 25VA

DTS 1000095930 EN Version: B Status: RL (released | freigegeben | validé) printed: 04.05.2009

Measurement principle

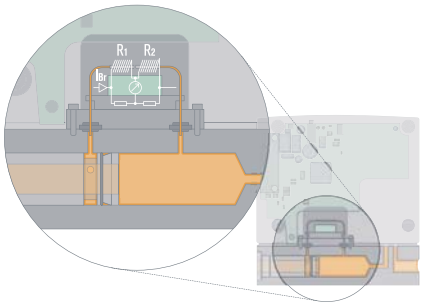

Measurement is based on the bypass principle. A laminar flow element in the main channel generates a small pressure drop. This drives a small flow, proportional to the main flow through the bypass (sensor tube).

Two heater resistors, which are connected in a measuring bridge, are wound on this narrow stainless steel tube. In the zero-flow state, the bridge is balanced, but with flow, heat is transported in the flow direction and the bridge becomes unbalanced.

The dynamics of the measurement is determined by the tube walls, which act as a thermal barrier. Through use of suitable software in the controller, measuring times are obtained that are adequate for a large part of applications (in the range of a few seconds).

With contaminated media, we recommend to install filter elements upstream. This avoids changes in the division ratio between main flow and sensor tube, as well as changes in the heat transmission caused by deposits on the walls of the sensor tube.

With these sensors, even aggressive gases can be controlled, because all essential parts in contact with the medium are fabricated in stainless steel. With this sensor principle it is also possible to convert between different gases. In the table you will find a choice of factors, others on request.

$Q(Gas) = f \times Q(N_2)$

Gas	Factor f
N_2	1.00
Air	1.00
O_2	0.98
H_2	1.01
Ar	1.4
He	1.42
CO_2	0.77

By using the gas factors it is possible that the accuracy is not within the datasheet specification.
For applications which need high accuracy it is recommended to calibrate under application conditions.

The compatibility of the sealing materials of the MFMs should be checked before use with another gas.

Notes regarding the selection of the unit

The decisive factors for the perfect functioning of a MFM within the application are the fluid compatibility, the normal inlet pressure and the correct choice of the flow meter range. The pressure drop over the MFM depends on the flow rate and the operating pressure.

The request for quotation form on page 5 contains the relevant fluid specification. Please use in this way the experience of Bürkert engineers already in the design phase and provide us with a copy of the request containing the data of your application together with your inquiry or order.

Ordering table for accessories (connectors are not included in the delivery)

Article	Item no.
15-pin Electrical Connection	
Sub-D socket 15-pin solder connection	918 274
Sub-D hood for Sub-D socket, with screw locking	918 408
Sub-D socket 15-pin with 5m cable, ass. on one side	787 737
Sub-D socket15-pin with 10m cable, ass. on one side	787 738
PROFIBUS DP	
M12 plug	918 198
M12 (coupling) socket	918 447
PROFIBUS T-Fitting	902 098
Adapter	
RS232 Adapter for PC connection	654 748
RS485 Adapter	654 538
PC 2m extension cable for RS232 9 pin. socket/plug	917 039
USB Adapter	670 639
Communications software MassFlowCommunicator	Info. at www.burkert.com

DTS 1000095930 EN Version: B Status: RL (released | freigegeben | validé) printed: 04.05.2009

Dimensions [mm]

Standard version

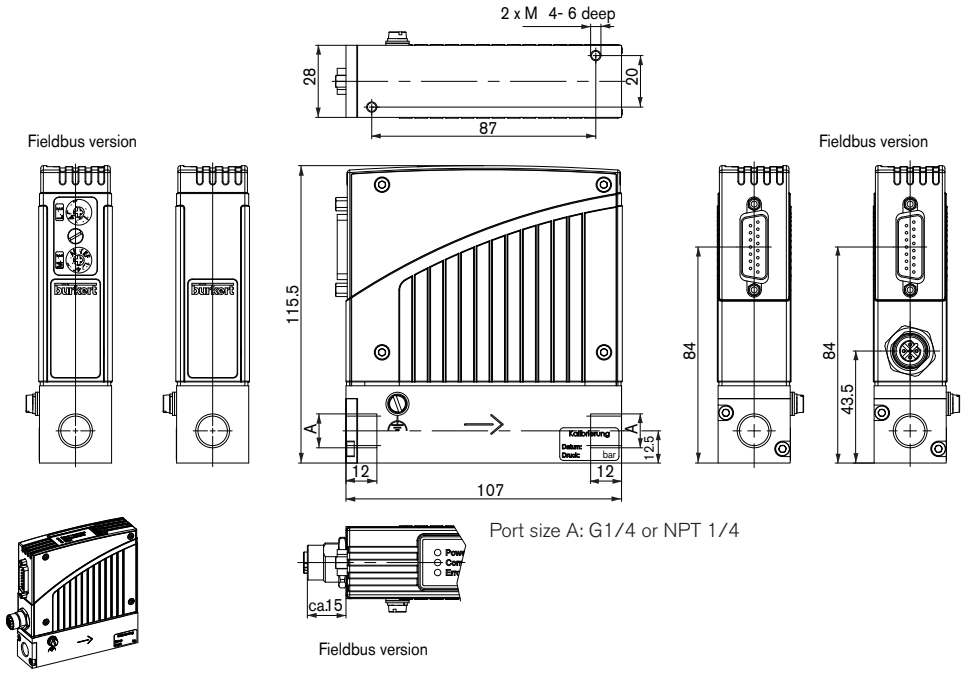

Sub-base version

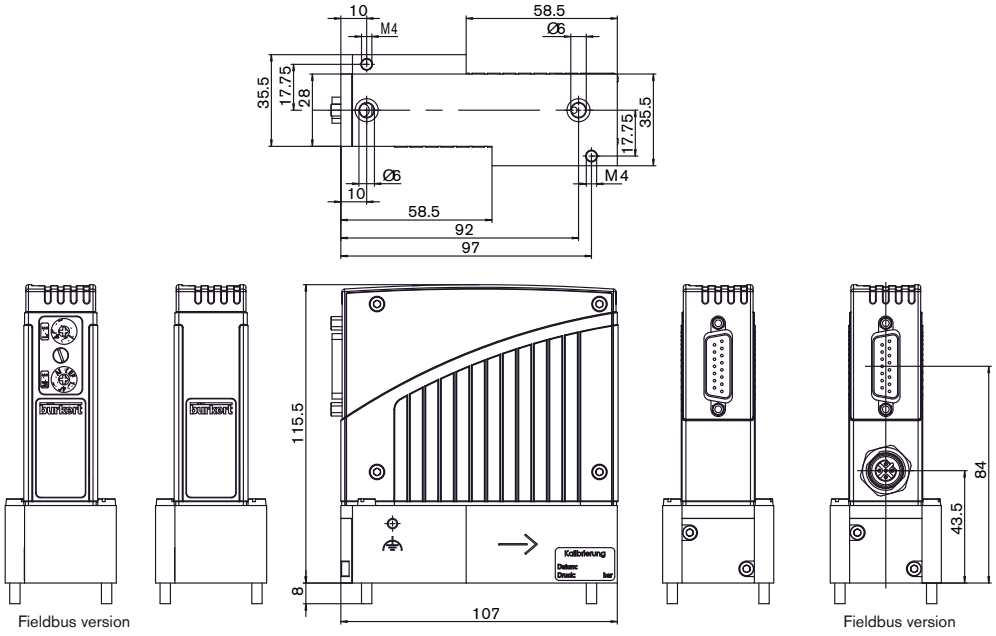

DTS 1000095930 EN Version: B Status: RL (released | freigegeben | validé) printed: 04.05.2009

Pin Assignment

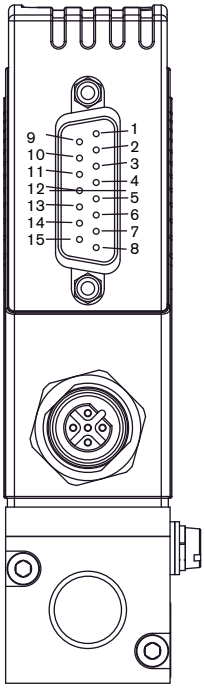

Plug Sub-D 15-pin

Pin	Connection
1	relay – NC contact
2	relay – NO contact
3	relay - C contact
4	GND 24 -V-supply and binary inputs
5	24 V supply +
6	8 V output (For factory use only!)
7	not used
8	not used
9	Process value output GND
10	Process value output +
11	DGND (for RS232)
12	Binary input 1
13	Binary input 2
14	RS232 RxD (without driver)
15	RS232 TxD (without driver)

Only with fieldbus version

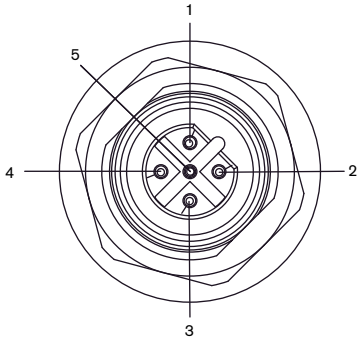

PROFIBUS DP – socket B-encoded M12 (DPV1 max. 12 Mbaud)

Pin	Connection
1	VDD
2	RxD / TxD - N (A-line)
3	DGND
4	RxD / TxD - P (B-line)
5	not used

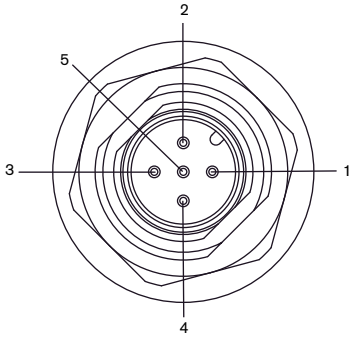

DeviceNet, CANopen – Plug M12

Pin	Connection
1	Shield
2	not used
3	DGND
4	CAN_H
5	CAN_L

DTS 1000095930 EN Version: B Status: RL (released | freigegeben | validé) printed: 04.05.2009

bürkert

Note
You can fill out the fields directly in the PDF file before printing out the form.

MFC/MFM applications - request for quotation

Please fill out and send to your nearest Bürkert sales centre* together with your inquiry or order

Company	Contact person
Customer No.	Department
Address	Tel./Fax
Postcode/Town	E-mail

☐ **MFC application** ☐ **MFM application** ☐ **Quantity** ☐ **Required delivery date**

Medium data

Type of gas (or gas proportion in mixtures) ☐

Density [kg/m³] [1] ☐

Medium temperature [°C or °F] ☐ °C ☐ °F

Moisture content [g/m³] ☐

Abrasive components / solid particles ☐ no ☐ yes, as follows: ☐

Fluidic data

Maximum flow Q_{nom} ☐ l_N/min [1] ☐ cm_N^3/min [1]
☐ m_N^3/h [1] ☐ cm_S^3/min (sccm) [2]
☐ kg/h ☐ l_S/min (slpm) [2]

Minimum flow Q_{nom} ☐ l_N/min [1] ☐ cm_N^3/min [1]
☐ m_N^3/h [1] ☐ cm_S^3/min (sccm) [2]
☐ kg/h ☐ l_S/min (slpm) [2]

Inlet pressure at Q_{nom} p_1 = ☐ barg ■

Outlet pressure at Q_{nom} p_2 = ☐ barg ■

Max. inlet pressure p_{1max} ☐ barg ■

Pipe run (external-Ø) ☐ metric, mm ☐ imperial, inch

MFC/MFM- port connection
- ☐ without screw-in fitting
  - ☐ 1/4 G thread (DIN ISO 228/1)
  - ☐ 1/4 NPT thread (ANSI B1.2)
- ☐ with screw-in fitting
- ☐ sub-base version

Ambient temperature ☐ °C

Material data

Sealing material ☐ FKM ☐ EPDM ☐ FFKM

Electrical data

Output Signal

with standard signal	with fieldbus
☐ 0-5 V	☐ PROFIBUS DP
☐ 0-10 V	☐ DeviceNet
☐ 0-20 mA	☐ CANopen
☐ 4-20 mA	

■ Please quote all pressure values as overpressures with respect to atmospheric pressure [barg]

[1] at: 1.013 bar (a) and 0°C [2] at: 1.013 bar (a) and 20°C

To find your nearest Bürkert facility, click on the orange box www.burkert.com

reset form

In case of special application conditions, please consult for advice.

Subject to alterations
© Christian Bürkert GmbH & Co. KG

0905/2_EU-en_00891881

DTS 1000095930 EN Version: B Status: RL (released | freigegeben | validé) printed: 04.05.2009